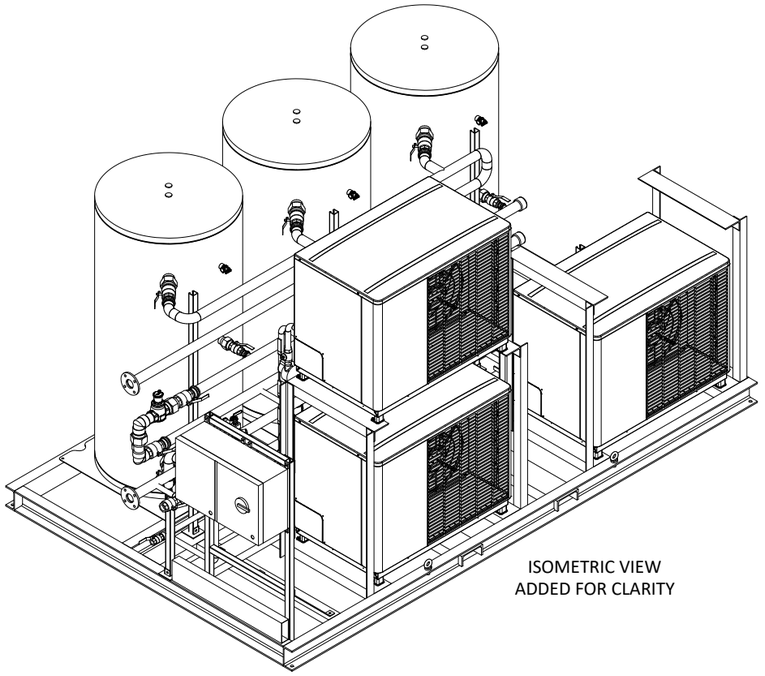

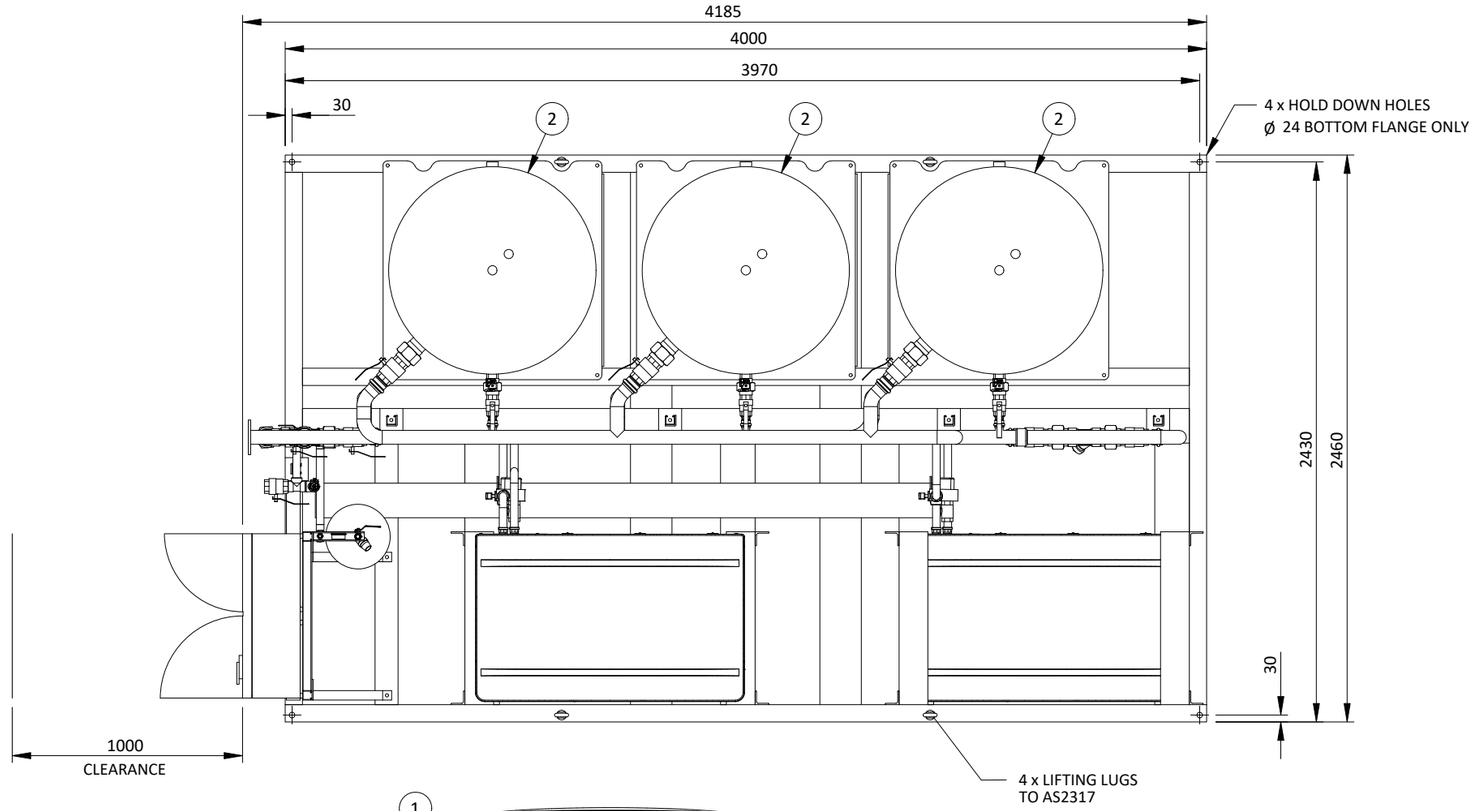

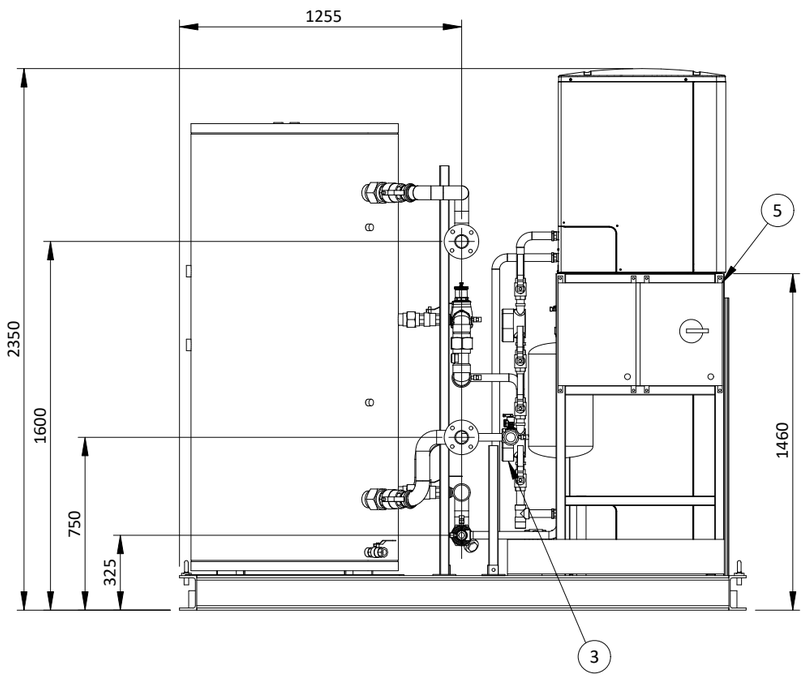

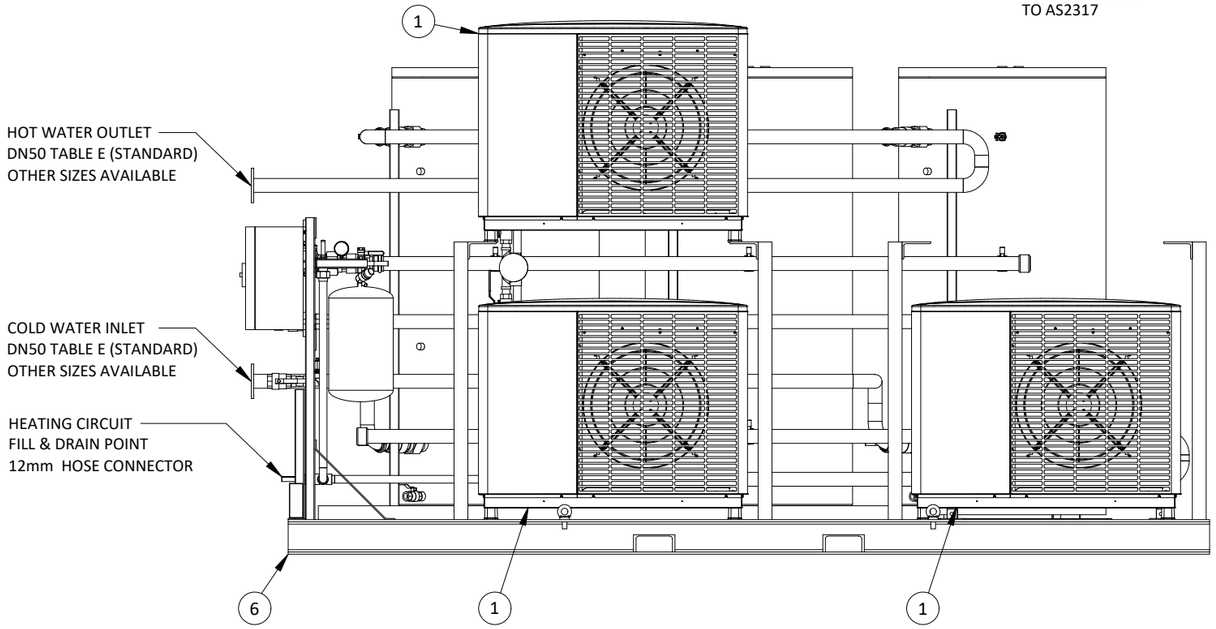

NOTES:

1. MINOR FASTENERS, PIPE SUPPORTS AND INSULATION NOT SHOWN FOR CLARITY.
2. STRUCTURAL STEEL GALVANISED TO AS4680.
3. PIPING PRESSIT COPPER WITH 25mm EPDM FOIL BACKED INSULATION. POTABLE PIPING PRESSFIT COPPER AS STANDARD, HOWEVER OTHER OPTIONS AVAILABLE.
4. SKID TO BE INSTALLED ON A LEVEL SLAB. FOR ANY VARIATION IN FLOOR LEVEL SHIMS SHALL BE USED TO SUIT SKID NATURAL SHAPE.
5. RECOMMENDED 1.2m CLEARANCE ON ALL SIDES FOR SERVICE ACCESS
6. WHEN LIFTING WITH LIFT LUGS A SPREADER BAR WITH MINIMUM 2.5m WIDTH MUST BE USED TO AVOID DAMAGING THE EQUIPMENT.

APPROX WEIGHT	
WPL-A 10.2 (DRY)	WPL-A 10.2 (WET)
1,790 kg	4,350 kg

ITEM	PART No	DESCRIPTION	QTY
6		STRUCTURAL SKID FRAME	1
5		ELECTRICAL CONTROL PANEL	1
4		EXPANSION TANK AND ACCESORIES	1
3		STIEBEL ELTRON WATER PUMP	3
2		STIEBEL ELTRON OUTDOOR TANK 800L	3
1		STIEBEL ELTRON WPL-A HEAT PUMP	3

REV	DATE	DESCRIPTION	DRN	CHK	APP
A	11/09/2026	FIRST RELEASE	JM	SL	SL

UNLESS OTHERWISE SPECIFIED
DIMENSIONS ARE IN MILLIMETERS
THIRD ANGLE PROJECTION
FABRICATION TOLERANCE: ± 2.0mm
MACHINED TOLERANCE: ± 0.5mm

SIZE: A3 SCALE: N.T.S

TEMPLATE: B0099-DWG-ADM-G-0001

THIS DRAWING IS CONFIDENTIAL AND THE PROPERTY OF RUBIGO GROUP PTY LTD. REPRODUCTION OR DISTRIBUTION RIGHTS ARE RESERVED EXCLUSIVELY TO RUBIGO GROUP PTY LTD UNLESS OTHERWISE AGREED

DO NOT SCALE DRAWING

STIEBEL ELTRON

GENERAL ARRANGEMENT
DOMESTIC HOT WATER SYSTEM
CM-T 33 SKID CONFIGURATION

DWG No: B1236-DWG-GAD-M-3300 SHEET: 1/1 REV: A